CarbonMax™ Airboat Propeller Instructions

WhirlWind composite adjustable airboat propellers offer excellent performance and unsurpassed durability. Every blade is equipped with our strong carbon spar and tough electro-formed Nickel leading edge shield. You will find easy assembly and blade pitch adjustment with our exclusive QuickChange hub system. Follow the attached installation and maintenance instructions for years of trouble free operation.

WARNING: Read Instructions Before Operating Propeller.

Introduction

Maximum RPM

After the propeller is installed, refer to the following table for maximum recommended RPM to avoid damage during operation.

WARNING: Do not exceed the maximum RPM for any propeller.

Blade Style	Diameter	Max. RPM	RPM Range	Pitch Range
CarbonMax™ SW 80	80″ to 84″	2250	1700 to 2250	10° - 20°
CarbonMax™ EX 79	77″ to 83″	2500	2000 to 2500	10° - 20°
CarbonMax™ 2.0	76″ to 80″	2700	2200 to 2700	10° - 20°
	82″ to 84″	2500	2000 to 2500	10° - 20°
CarbonMax™ 72	70″ to 74″	3000	2500 to 3000	7.5° - 17.5°
CarbonMax™ Narrow 72	70″ to 74″	3000	2500 to 3000	7.5° - 17.5°
CarbonMax™ 68	66″ to 68″	3150	2500 to 3150	7.5° - 17.5°

Required Tools

You will need the following tools to assemble your propeller:

a. 3/4″ socket and ratchet

b. 13/16″ socket and ratchet

c. Torque Wrench

d. Digital Level (optional)

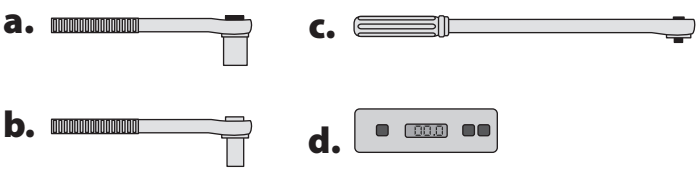

NOTE: Recommend WD-40 to clean prop flange before installation and anti-seize compound on all hardware.

Safety Information

WARNING: Propellers are dangerous. Use Extreme Caution anytime you are near the propeller whether the propeller is turning or not. Propellers Can Cause Severe Bodily Harm or Death.

WARNING: Keep Hands & Feet & Body Away From Propeller At All Times. Failure to do so will result in severe bodily harm or death.

WARNING: To ensure years of trouble free service - READ and FOLLOW ALL DIRECTIONS. Failure to do so may lead to propeller failure.

WARNING: For Safety, Never Allow Anyone to Stand in the Same Plane as the Propeller.

Installation

❶ Unpack Propeller and Parts

Carefully unpack your propeller from the factory box and take an inventory. Verify the parts agree with packing list.

1 - Hub (front & back)
1 - Universal Spacer
6 - Mounting Bolts & Washers (standard size 1/2", alternate 7/16' or 3/8")
6 - Blade Clamp Bolts & Washers per blade (3/8")-A2 Hub
X - Blades (depends on blade style)

Bolts are grade 8, fine thread

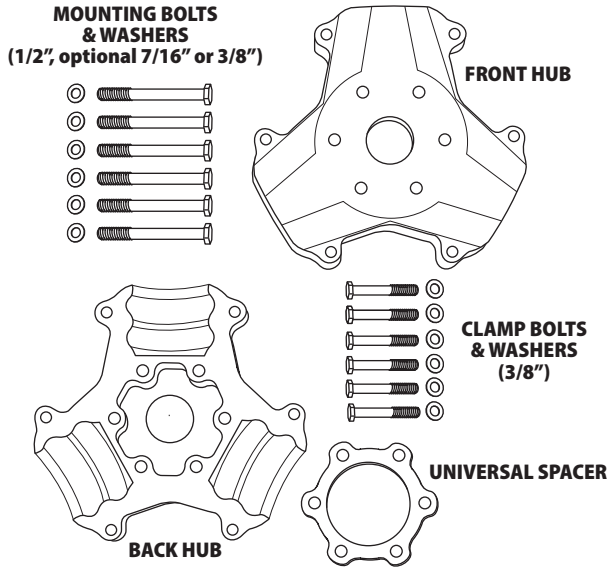

❷ Prepare Engine Hub Half

a. Place the Engine Hub Half on a clean flat table.

b. Place the flat Universal Spacer in the center on the inside of the hub.

c. Carefully place blade shanks into the hub.

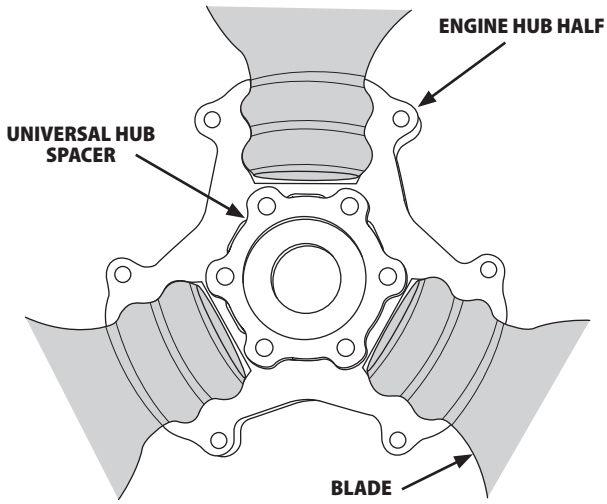

❸ Install Free Hub Half

a. Place the Free Hub Half over the blade shanks, universal spacer and back half of the hub. Gently lift the blade tips and seat the hub halves.

b. Install the 3/8" Clamp Bolts and Washers (use an Anti-Seize compound on threads) into the hub. Do not cross-thread these bolts into the hub.

c. Repeat for all blades. Tighten the 3/8" bolts so the blades are firmly held in the hub, but the blades can still be smoothly rotated in the hub.

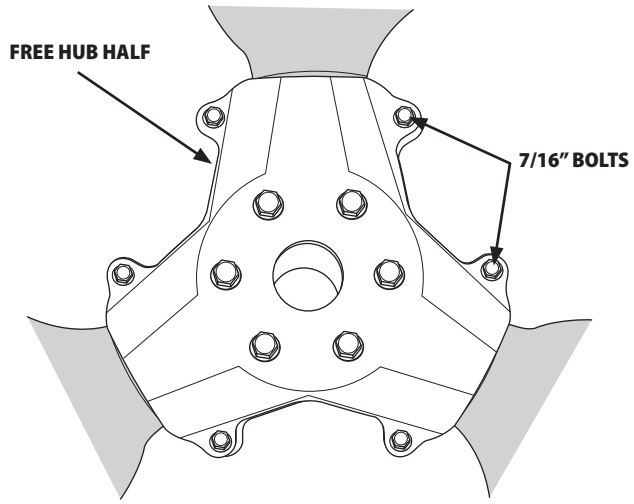

NOTE: Do NOT force or hammer any propeller parts together.

NOTE: Legacy style hubs use 7/16" clamping bolts

❹ Install the Propeller on the Airboat

a. Make sure your propshaft is clean and free of rust and corrosion. **This cannot be stressed enough**. A clean and rust free flange will ensure proper installation and prevent the hub from permanently bonding to your flange with rust.

NOTE: It is recommended to spray your flange with a rust inhibitor (such as LPS or WD40) prior to propeller installation.

b. Mate propeller to propshaft and install 1/2" Mounting Bolts and Washers. Tighten bolts symmetrically and make sure propeller is securely pulled up to propshaft – no gaps allowed.

c. Next, torque 3/8" Blade Clamp Bolts to **25 ft-lbs** and 1/2" propshaft bolts to **45 ft-lbs**.

Blade Movement: Any blade movement in the hub is unacceptable.

Blade Track: Ensure hub has been installed flat against mounting flange, and ensure that each blade is well seated in the hub (not misaligned or crooked). Check the blade track to ensure the blades are within 0.125 inch of each other and that the blades are held firmly in the hub.

WARNING: Do Not Exceed Max Propeller RPM (See Page 2). Propeller blade failure may occur if max. propeller RPM is exceeded - resulting in severe bodily injury or death!

WARNING: Harmonic Damper is required on the following engines. Warranty void if installed otherwise.

- 8 Cylinder Continental GPU engines
- Direct Drive Cadillac Auto Engines

WARNING: Ignition Timing not to exceed 25°, top dead center, on aircraft engines.

❺ Initial Pitch Setting

a. To set the initial pitch, line-up the indicator line on the shank of each blade to correct rotation of degree marks on hub (left or right hand rotation). The propeller has been designed to operate from 10° to 30° for optimum performance. The pitch is adjustable in 2.5° increments.

NOTE: Blades come with a degree indiactor sticker that is alligned with a scribe mark on the blade. It is recommended to start at a 15° pitch angle to achieve target max static RPM. Be sure not to exceed the blades max RPM

b. Initial Pitch Setting: Start with a pitch setting of 15° on the hub. (Refer to Step 7 – Maximum RPM Setting).

WARNING: Before operation, ALL blades must be secure in hub as per Step 4.

Installation

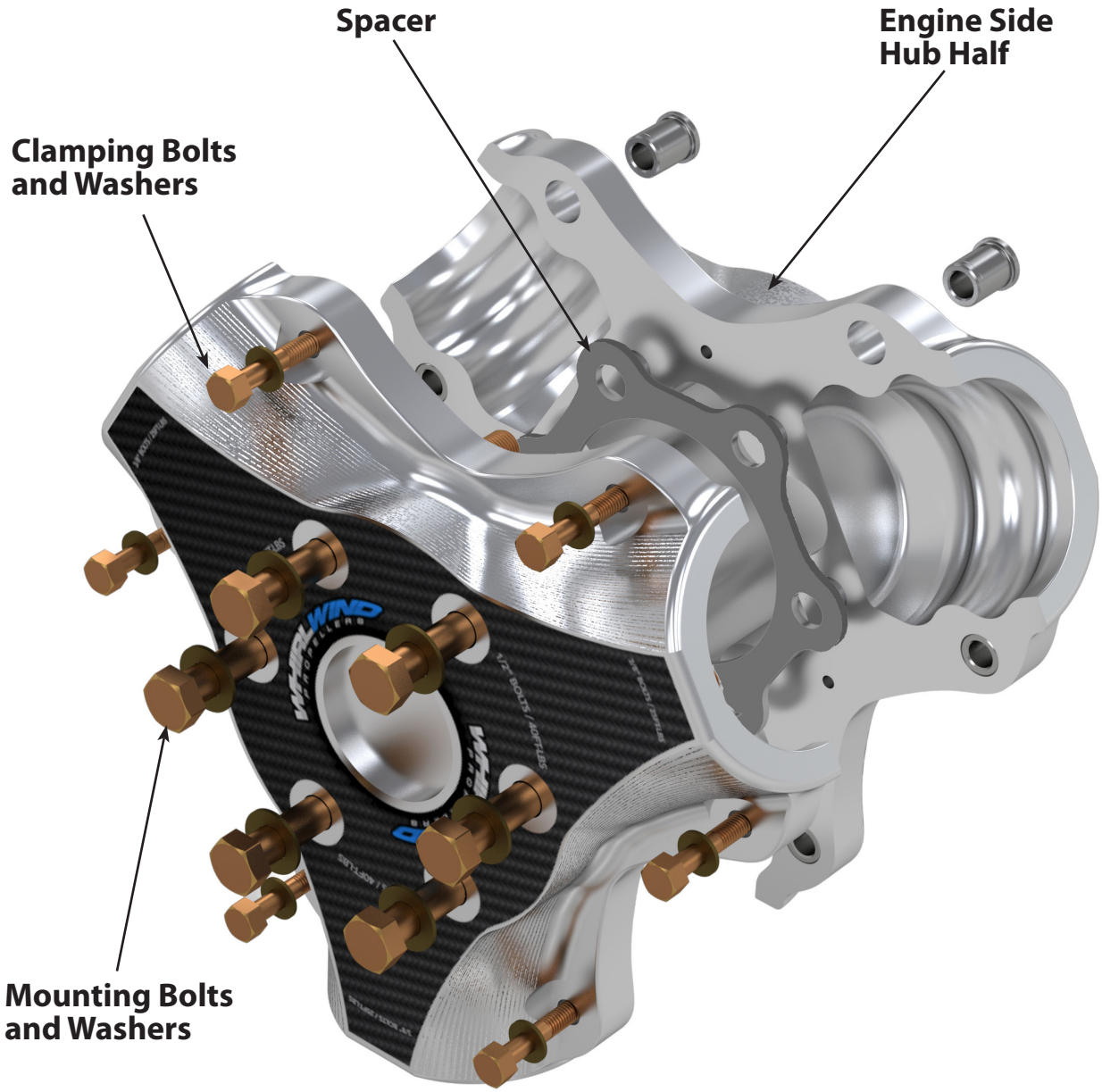

Pitch Setting

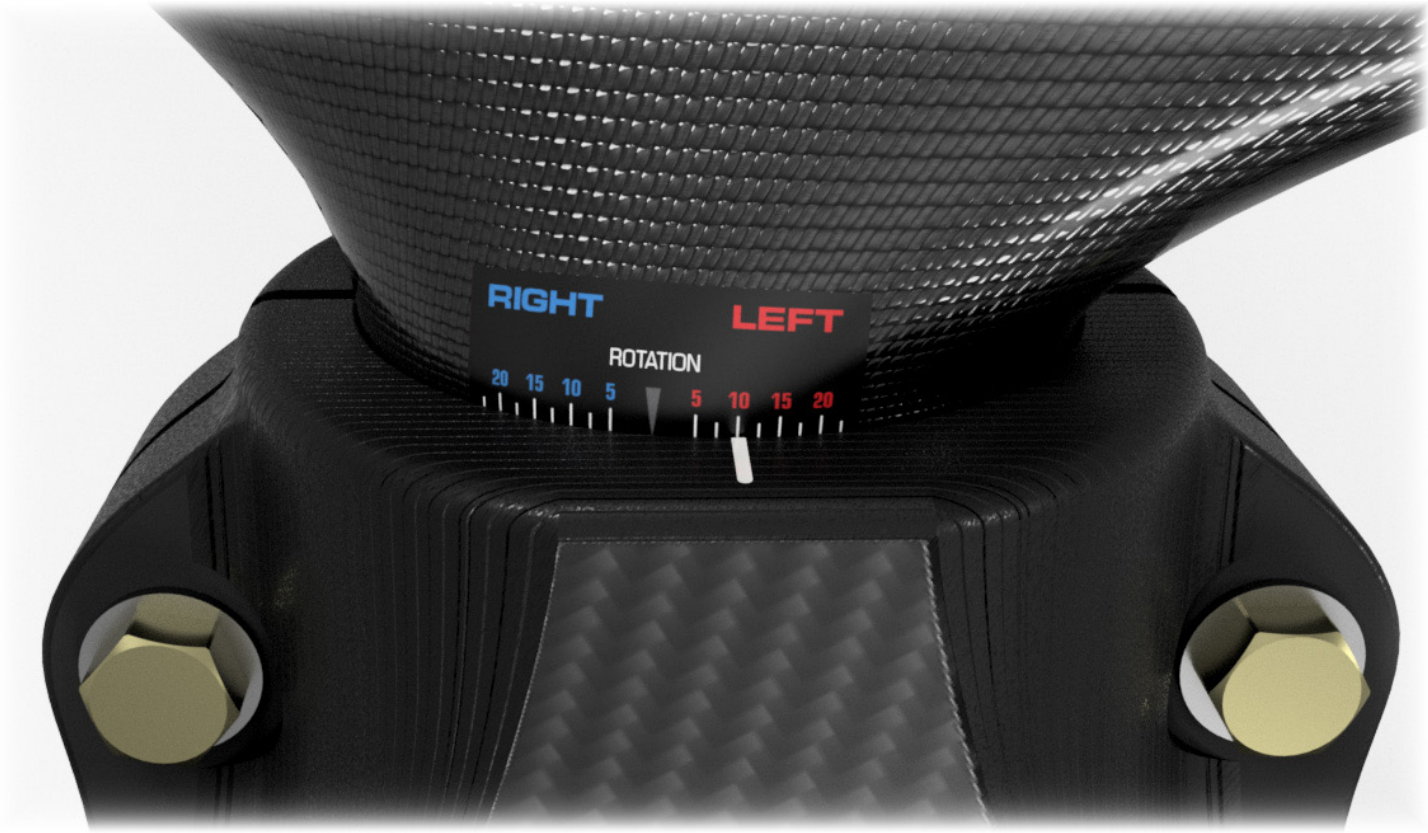

Blade Style	Diameter	Max. RPM	RPM Range	Pitch Range
CarbonMax™ SW 80	80″ to 84″	2250	1700 to 2250	10° - 20°
CarbonMax™ EX 79	77″ to 83″	2500	2000 to 2500	10° - 20°
CarbonMax™ 2.0	76″ to 80″	2700	2200 to 2700	10° - 20°
	82″ to 84″	2500	2000 to 2500	10° - 20°
CarbonMax™ 72	70″ to 74″	3000	2500 to 3000	7.5° - 17.5°
CarbonMax™ Narrow 72	70″ to 74″	3000	2500 to 3000	7.5° - 17.5°
CarbonMax™ 68	66″ to 68″	3150	2500 to 3150	7.5° - 17.5°

❻ Initial Engine Run

NOTE: Before starting your engine and new propeller for the first time, ensure the propeller blades clear all engine parts (suggested minimum clearance of at least 2"). Repeat this step each time you change the pitch setting of your propeller.

a. Run the engine up to 2000 propeller RPM. Shut the engine down.

b. Inspect the overall condition of blades, leading edge and hub. Firmly grab each blade tip and apply a forward and aft force in ensure each blade is tight in the hub. Do not operate propeller if blades have any movement in hub.

c. Check for proper torque on all bolts (3/8" bolts to 25 ft-lbs and 1/2" bolts to 45 ft-lbs).

d. Check bolt torque and perform visual inspection as described in "Propeller Care and Maintenance" after every 20 to 25 hours of operation. Enjoy your new propeller and have fun!

❼ Maximum RPM Setting

a. You may run the engine up to max. engine RPM, but **DO NOT EXCEED MAX. PROPELLER RPM**! (See Page 2)

b. To find the pitch setting for maximum thrust (max RPM), start with a blade pitch setting of 15° and do a full throttle run-up while the boat is secured. DO NOT EXCEED MAX RPM!

- If the engine RPM is low - decrease the blade pitch to increase RPM.
- If the engine RPM is too high - increase the blade pitch to decrease RPM.

NOTE: For maximum thrust performance, set the static propeller RPM 100 to 200 less than max RPM (see chart on Page 2) at full throttle. (The reason for setting 100 to 200 under max RPM is that RPM will be gained when operating the boat out in the open.) However, you may not want or need to turn your engine this fast if you are interested in reducing noise or increasing fuel economy.

NOTE: Lower Cruise RPM and better Fuel Economy can be achieved with lower full throttle WOT RPM and higher blade angle.

Propeller Care and Maintenance

Proper care and maintenance of your Whirl Wind propeller will ensure a long life with many hours of trouble free operation.

Before each use, carefully examine the propeller blades and hub for looseness, any signs of damage, excessive wear or any other condition that would make the propeller unsafe to operate.

In particular, before operating check: hub bolt torque, propeller hub for any signs of cracking, blade shanks for roughness or raised fibers, blades for impact damage or cracks, and the metal erosion shield for signs of lifting or damage.

Blades

Every 25 hours of operation a complete inspection of your propeller should be performed.

- Wash & Clean all blades with a mild detergent (such as Simple Green).
- Optional: Polish blades with clear liquid automotive polish for an additional layer of UV protection (such as Turtle Wax Ice).
- Inspect overall condition of blades, looking for chips, cracks, and any leading edge damage. If the leading edge is damaged, this can be repaired by returning to Whirl Wind with the full set of blades. If damage is neglected, it may worsen, making repair impossible and causing propeller to be unsafe to operate

Hub

- Wash & clean hub with a mild detergent (such as Simple Green).
- Inspect overall condition of hub. Inspect interior and exterior thoroughly for any signs of hair-line cracking. If any cracks are detected, contact Whirl Wind for assessment.

Bolt Torque Values

Check bolt torque on all bolts after the first 5 hours of operation and then every 25 hours thereafter.

- 1/2" bolts to 45 ft-lbs
- 7/16" bolts to 35 ft-lbs
- 3/8" bolts to 25 ft-lbs

NOTE: Every Whirl Wind propeller blade is manufactured using a state-of-the-art production process that yields a smooth surface finish on each blade. There may be slight marks on the surface, such as small bubbles and/or pinholes - these marks are common to this type of advanced manufacturing process and do not affect the structural integrity of the

30 Day Satisfaction Guarantee

Whirl Wind Propellers Corporation guarantees your satisfaction for a period of 30 days from date of purchase to the Original Purchaser. If during this time you are not satisfied with our product you may send the propeller back for an exchange or for a full or partial refund. Any shipping and handling charges are non-refundable. If you have tested the propeller on your boat, the propeller may be subject to a restocking fee if the propeller shows excessive signs of wear or abuse.

Simply return the propeller to the address below. Returned items must be within 30 days of purchase to qualify. Return shipping must be prepaid and insured for the full value of the propeller or parts. The cost of returning the propeller is incurred by the customer. Whirl Wind Propellers reserves the right to refuse any return found to be the result of a suspicious origin or untrustworthy nature.

Return Address: Whirl Wind Propellers
1800 Joe Crosson Drive, Ste C
El Cajon, CA 92020

Whirl Wind Propellers Corporation

Whirl Wind Propellers
1800 Joe Crosson Drive, Ste C
El Cajon, CA 92020

(619) 562-3725

www.whirlwindpropellers.com

Limited Warranty

Whirl Wind Propellers Corporation expressly warrants its products to be free from defects in material and workmanship under normal use and service for a period of twelve (12) months after delivery to the original retail purchaser.

WARNING: Whirl Wind airboat propellers are not suitable for installation on the following engines without the use of a harmonic damper. Installation on these engines shall void all warranty claims.

- 8 Cyl Continental GPU Engines
- Direct Drive Cadillac Auto Engines

WARNING: Whirl Wind airboat propellers are not suitable for installation on the aircraft engines that have removed the crankshaft counterweights. Installation on these engines shall void all warranty claims.

WARNING: Whirl Wind airboat propellers are not covered by warranty when used for racing of any kind due to the infinite variety of racing modifications and set-ups. The racer assumes all risks and accepts personal responsibility for any and all loss, liability, damages, or costs following such injury, permanent disability, or death.

WARNING: Any Blade Style with a diameter of 76" or greater may ONLY be installed on engine applications using reduction systems. Direct drive installations are not permitted and are not safe to operate. Direct Drive installations of these blade styles shall void all warranty claims.

WARNING: For Aircraft engine installations, timing advance must not be greater than 25° Top Dead Center or warranty shall be void.

Whirl Wind Propellers Corporation's obligation under this limited warranty is limited to repairing or replacing, at its option, any propeller or propeller hub, determined by Whirl Wind to have been defective and which is properly returned by the owner, with a written statement describing the alleged defect, to its place of business at El Cajon, California USA. Any replacement of a unit or a part of a unit during the warranty period will not extend the warranty beyond the original duration.

Procedure For Obtaining Warranty Service: All warranty returns are to be shipped prepaid and insured for the full value of the item being returned to Whirl Wind Propellers Corporation at the address listed below. Upon receipt of the unit, Whirl Wind Propellers Corporation will decide which remedy, repair, or replacement it will provide. The unit must be accompanied by a copy of the original (Distributor or Dealer) invoice and a brief description of the defect. The remedy of repair or replacement is exclusive and does not include the cost of shipping, removal, or installation, all of which are the customer's responsibility.

Whirl Wind Propellers – Warranty Returns
1800 Joe Crosson Drive, Ste C
El Cajon, CA 92020

Conditions, Exclusions, and Disclaimers: This limited warranty applies to units that have been used and maintained properly. It does not cover units that show abuse, alterations, improper installation, or improper packaging for shipment; and it does not pertain to damage due to object strike or excessive blade wear due to operation.

To the extent allowed by applicable law, THIS WARRANTY IS EXPRESSLY IN LIEU OF ANY OTHER WARRANTIES, EXPRESSED OR IMPLIED IN FACT OR BY LAW, INCLUDING ANY IMPLIED WARRANTY OF MERCHANTABILITY OR FITNESS FOR A PARTICULAR PURPOSE. THE REMEDIES OF REPAIR OR REPLACEMENT SET FORTH HEREIN ARE THE ONLY REMEDIES UNDER THIS WARRANTY. Whirl Wind DISCLAIMS ANY OBLIGATION OR LIABILITY, WHETHER IN CONTRACT OR IN TORT, INCLUDING LOSS OF USE OF THE PRODUCT WARRANTED, LOSS OF TIME, INCONVENIENCE, LOSS OF PROFITS, COMMERCIAL LOSS OR ANY OTHER DIRECT, CONSEQUENTIAL, SPECIAL OR INCIDENTAL DAMAGES. THIS WARRANTY IS IN LIEU OF ANY OBLIGATION OR LIABILITY ON THE PART OF Whirl Wind TO ANYONE OF ANY NATURE WHATSOEVER by reason of the manufacture, sale, lease or use of the warranted products and Whirl Wind neither assumes nor authorizes anyone to assume for it any other obligation or liability in connection with such warranted products.

Repair or replacement of a nonconforming unit or part is the exclusive remedy for breach of this limited warranty, and shall constitute fulfillment of all liabilities of Whirl Wind Propellers Corporation to a customer or user, whether based on contract, negligence or otherwise. IN NO EVENT SHALL WHIRL WIND PROPELLERS CORPORATION BE LIABLE FOR INCIDENTAL OR CONSEQUENTIAL DAMAGES.