GA-200L Propeller

Installation and Operation Instructions

(Models: 616, 716, 816)

Lycoming Engines

ATTENTION: Failure to follow these instructions will void all warranties, expressed or implied. Mounting difficulties, vibration, and or failure can result from improper assembly of the propeller blades and hub components.

CAUTION: Rotating propellers are particularly dangerous· Extreme caution must be exercised to prevent severe bodily injury or death·

For Lycoming Engines Rev13: 01/2022

Checklist

Read through all instructions first, then use this checklist to check off items as you read through a second time and perform the installation.

Checklist

- ❒ Read through this entire instructions manual
- ❒ Ignition off; wheels chocked; parts inventoried; engine flange cleaned (WD-40)
- ❒ Verify drive lug dimensions (page 5)
- ❒ Spacer:
  - ❒ Line up for hand-propping
  - ❒ Tap onto lugs with mallet
  - ❒ Loctite and torque bolts with Broom Trick
- ❒ Spinner Back Plate:
  - ❒ Line up with flush lugs
  - ❒ Sand protruding lug holes if lugs don't fit through them
- ❒ Aft Hub Half:
  - ❒ Line up counter-bores with protruding lugs and ensure flush fit against mounting surface
  - ❒ Torque mounting bolts with Broom Trick (use Loctite for 816 Hub with flat washers)
- ❒ Blades and Forward Hub Half:
  - ❒ Leading edges should face clockwise from the plane's perspective
  - ❒ Lightly secure hub over blades
  - ❒ Set approximate blade pitch (Table 6) and SLOWLY tighten and torque bolts (clamping bolts may have different torque value than mounting bolts!)
  - ❒ Re-check blade angles (should be within about 0.3° of each other)
- ❒ Check static RPM (page 10) and adjust pitch as necessary. Lock washers click loudly when loosened and can be reused about 10 times
- ❒ Run engine for 5 min at 50% RPM and re-check all mounting and clamping bolt torques
- ❒ Spinner Forward Bulkhead:
  - ❒ Line up bolts with non-square bolt pattern
  - ❒ Washers should sandwich the bulkhead when installing bolts
  - ❒ Do not over-torque bolts or they will break; use safety wire or loctite
- ❒ Install spinner dome and Fairings with #8 screws
- ❒ Fly aircraft and note max rpm in level flight, wide open throttle (DO NOT EXCEED MAX ENGINE RPM!), re-pitch propeller as necessary (see Pitch and Propeller Performance p. 17)
- ❒ 5 Hr Inspection
- ❒ Dynamically Balance Propeller (Recommended)
- ❒ Follow all inspections (page 11)

Quick Reference Sheet

Overall Installation Procedure

- Install Propeller (Do not install spinner dome yet)
- Perform Static RPM Check
- Re-Pitch Propeller as necessary (100 RPM/1°)
- Run 50% of Max RPM for 5 min.
- Check Bolt Torques
- Install Spinner
- Fly aircraft and note max rpm in level flight, wide open throttle (DO NOT EXCEED MAX ENGINE RPM!).
- Re-Pitch Propeller as necessary (see Pitch and Propeller Performance).
- Perform all inspections and recommended dynamic balancing

Inspection Intervals	Inspection Type
Any Pitch Change	Check Bolt Torque (Mounting bolts may be different than clamping bolts)
First 5 Hours	
Every 25 Hours	
Every 50 Hours	50 Hr Per Page 12
Repeat intervals every 25 and 50 Hr until 2000 hours is reached and a major periodic inspection is necessary	

Broom Trick: Temporarily install forward hub's mounting bolts and place a broom stick between them while you torque desired mounting bolts.

Hub	Bolt Type	Size	Socket	Torque (ft-lbs)	Torque (in-lbs)
616	Clamping	3/8"	9/16"-6pt	30	360
	Mounting	3/8"	9/16"-6pt	30	360
716	Clamping	3/8"	9/16"-6pt	30	360
	Mounting	7/16"	5/8"-6pt	40	480
816	Clamping	3/8"	9/16"-6pt	30	360
	Mounting	1/2"	3/4"-12pt	50	600
Spacer	Mounting	3/8"	9/16"-6pt	30	360
		7/16"	5/8"-6pt	40	480
		1/2"	3/4"-12pt	50	600

Torque Values	
3/8" Bolts	30 ft-lbs (360 in-lbs)
7/16" Bolts	40 ft-lbs (480 in-lbs)
1/2" Bolts	50 ft-lbs (600 in-lbs)

! To torque bolts, follow tightening pattern below and tighten in the following increments: 50%, 75%, then Full Torque.

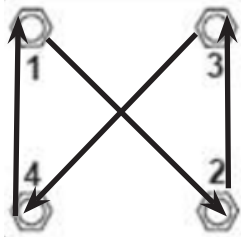

Propeller	Example Aircraft	Engine	Blade Pitch	Static RPM
High Speed	RV-9	150HP	20°	2200 to 2350
High Speed	RV-6A	160HP	21.5°	
High Speed	RV-4	180HP	23°	
STOL 78"	CUB	150HP	15°	2300 to 2450
STOL 82"	CUB	180HP	16°	

! **NOTE:** Blade pitch angles will typically need to be adjusted until the target static RPM is achieved. **See Pitch and Propeller Performance** on page 17 for more info on selecting pitch.

GA200L Propeller Models

These instructions apply to the following propellers:

Propeller	Hub Models	Diameters
GA200L High Speed	616, 716, 816	68”-72”
GA200L STOL	616, 716, 816	76”-82”

Table 1

Contents

CAUTION – Experimental Installations Only.

This GA200L propeller is an experimental propeller system. WWPC has designed and engineered this propeller for specific series engines with general known characteristics. However, it is impossible to know and test all possible modifications and combinations of modifications for these type engines in the experimental category. The owner and operator of this propeller acknowledges this nature of the experimental category and understands that experimental engine modifications can severely limit the life and reliability of this propeller. INSTALLATIONS ON MODIFIED ENGINES MAY CREATE AN UNSAFE CONDITION THAT MAY RESULT IN DEATH, SERIOUS BODILY INJURY, AND/OR SUBSTANTIAL PROPERTY DAMAGE.

GA200L Packing List (with 12" Spinner-Optional)

Item	Description	Qty
1	Spinner Dome	**1**
2	Fwd Hub Mounting Bolt (4.5" Lg)*	**4**
3	Fwd Hub Wedge Lock Washers*	**4**
4	Clamping Bolts 3/8" (AN6-20A)	**4**
5	Clamping Wedge Lock Washers 3/8"	**4**
6	Forward Hub Half	**1**

Item	Description	Qty
7	Aft Hub Mounting Bolts (1.75" Lg)*	**2**
8	616 Hub: 3/8" Nord-Lock (0.825" OD) 716 Hub: 7/16" Nord-Lock Washer 816 Hub: AN960-816 Flat Washer	**2**
9	Aft Hub Half	**1**
10	Spinner Backing Plate	**1**

Table 2

***-616 3/8" Mounting Bolts, 2-0.650" OD Wedge Lock Washers**
***-716 7/16" Mounting Bolts**
***-816 1/2" Mounting Bolts**

IMPORTANT: See Table 10 on page 11 for torque values and interval checks

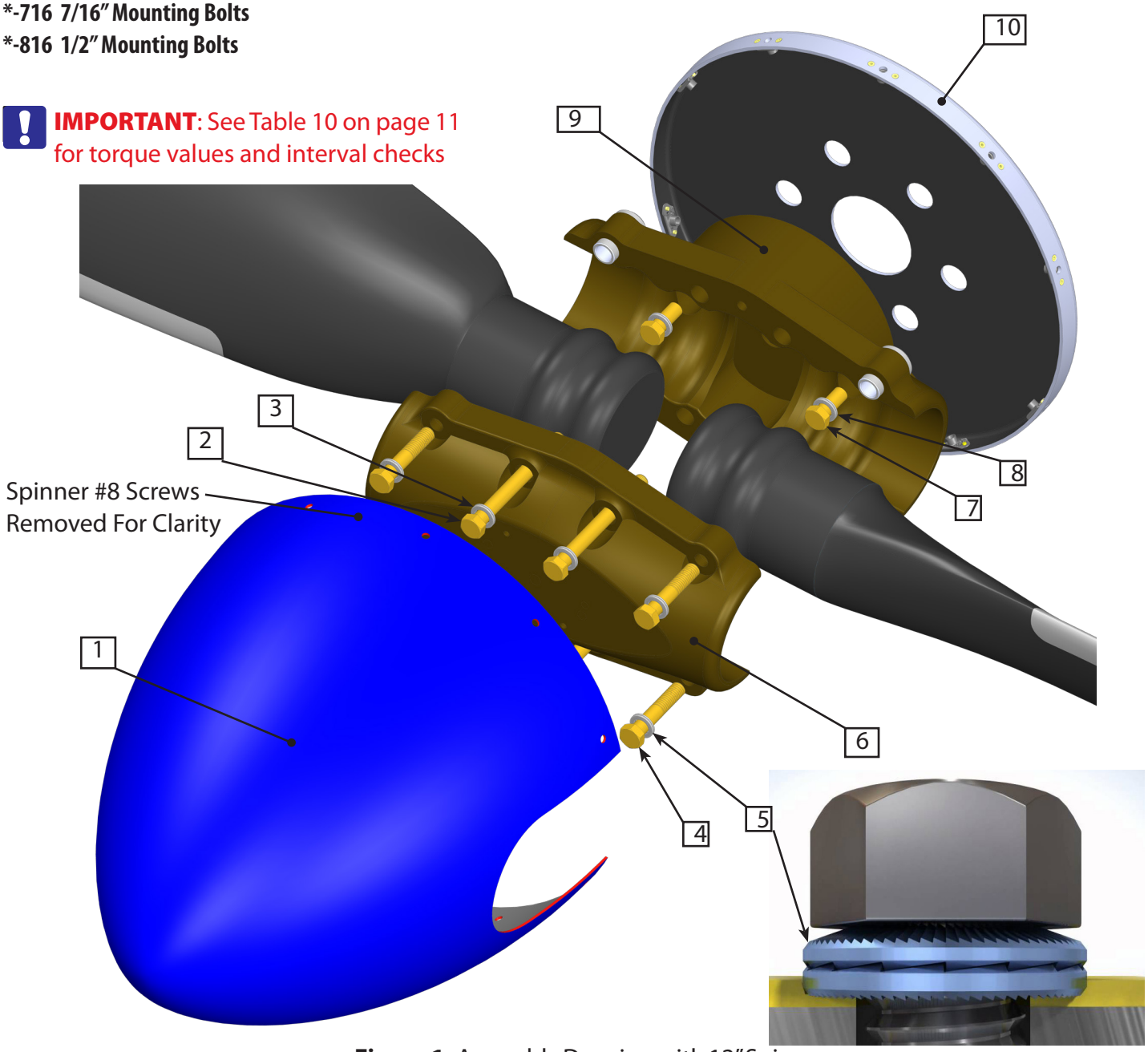

Figure 1- Assembly Drawing with 12" Spinner

GA200L Packing List (with 13" Spinner-Optional)

Item	Description	Qty
1	Spinner Dome	**1**
2	Fwd Hub Mounting Bolt (4.5" Lg)*	**4**
3	Fwd Hub Wedge Lock Washers*	**4**
4	Clamping Bolts 3/8" (AN6-20A)	**4**
5	Clamping Wedge Lock Washers 3/8"	**4**
6	Forward Hub Half	**1**
7	Aft Hub Mounting Bolts (1.75" Lg)*	**2**
8	616 Hub: 3/8" Nord-Lock (0.825" OD) 716 Hub: 7/16" Nord-Lock Washer 816 Hub: AN960-816 Flat Washer	**2**
9	Aft Hub Half	**1**
10	Spinner Backing Plate	**1**
11	Spinner Fairing	**2**

Item	Description	Qty
12	Spacer Mounting Bolt 3" Lg*	**6**
13	Flat Washer	**2**
14	Optional Spacer	**1**
15	Forward Bulkhead AN3H3A Screw	**4**
16	Forward Bulkhead #10 Washer	**4**
17	Spinner Forward Bulkhead	**1**

Table 3

***-616 3/8" Mounting Bolts, 2-0.650" OD Wedge Lock Washers**
***-716 7/16" Mounting Bolts**
***-816 1/2" Mounting Bolts**

IMPORTANT: See Table 10 on page 11 for torque values and interval

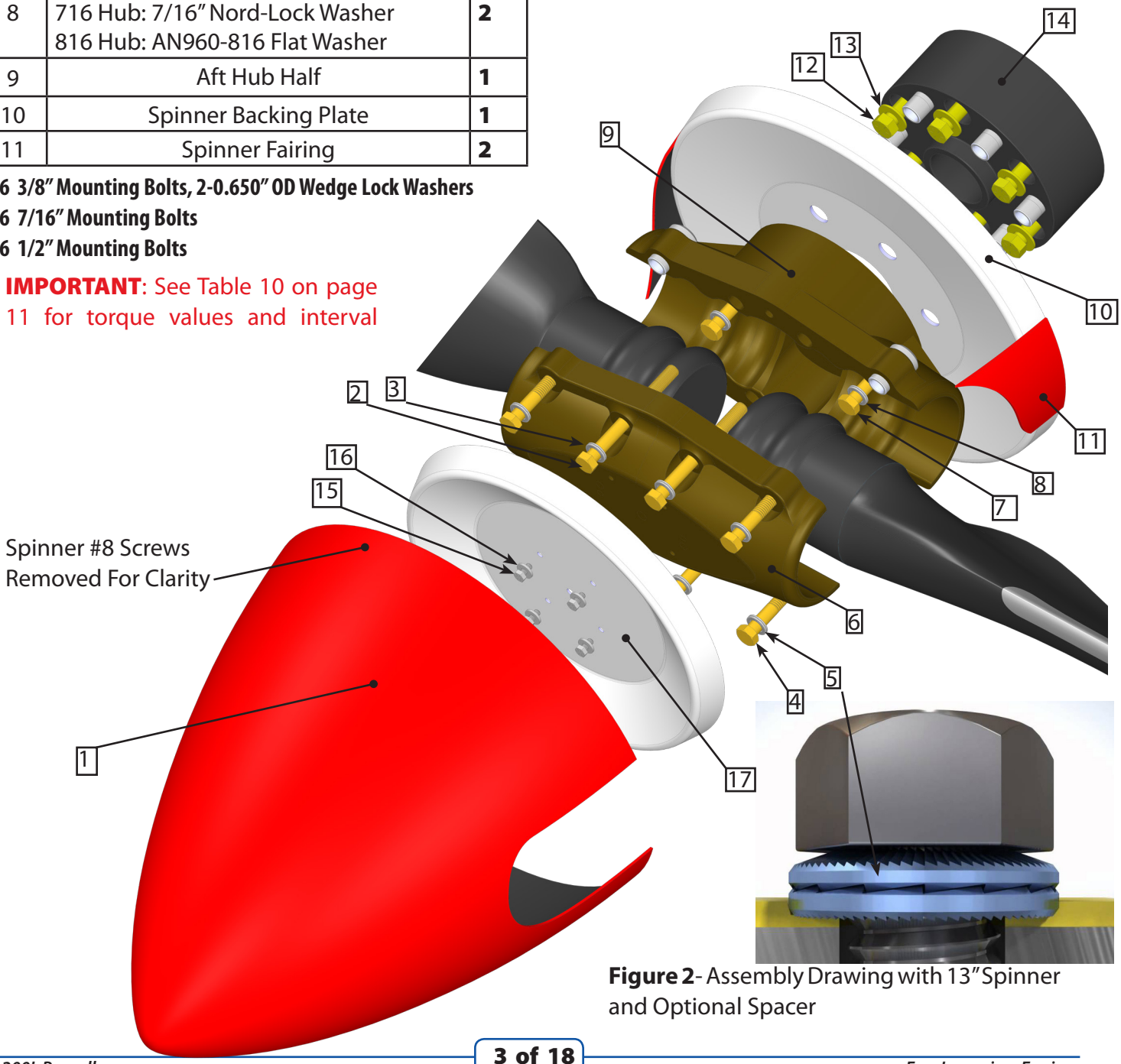

Figure 2- Assembly Drawing with 13" Spinner and Optional Spacer

GA200L HUB - MOUNTING BOLT

MINIMUM THREAD ENGAGEMENT IN DRIVE LUG THREADS

NOTE: **THE BOLT MIGHT NOT EXTEND COMPLETELY THROUGH THE DRIVE LUG**

NOTE: **TAKE CARE THAT THE MOUNTING BOLTS DO NOT SHANK OUT IN THE DRIVE LUG**

Mounting Bolt Diam.	Min. Thread Engagement
3/8″	0.400″
7/16″	0.500″
1/2″	0.600″

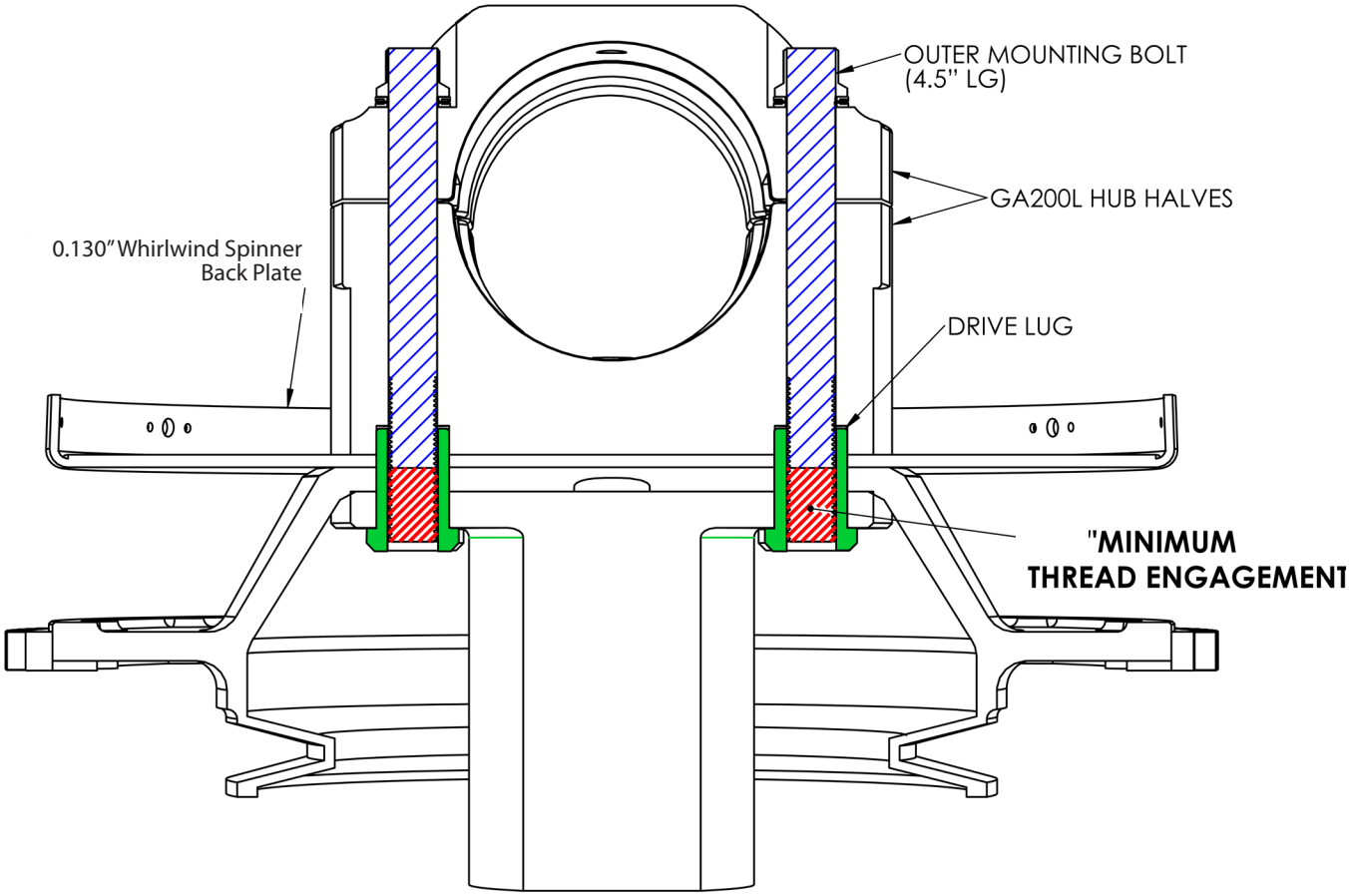

Figure 3- GA200L Thread Engagement Cutaway

WARNING!: If using a Non-Whirl Wind Spacer, check the bolt length needed for proper thread engagement.

Required Drive Lug Dimensions- Typical Lycoming Engine Flange and Optional Spacer/Extension (2.25”)

DRIVE LUGS MUST EXTEND A MINIMUM OF 0.275”BUT NOT MORE THAN 0.375” FROM THE MOUNTING SURFACE.
Note: these dimensions do not include the thickness of the spinner backing plate.

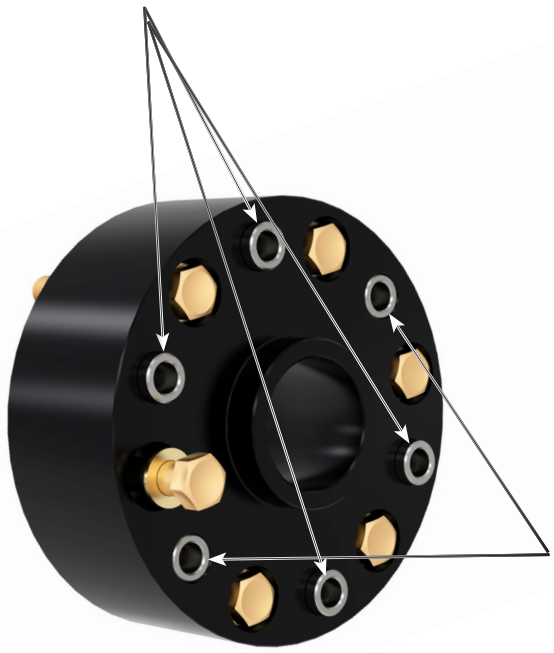

Figure 4- GA200L Optional Spacer

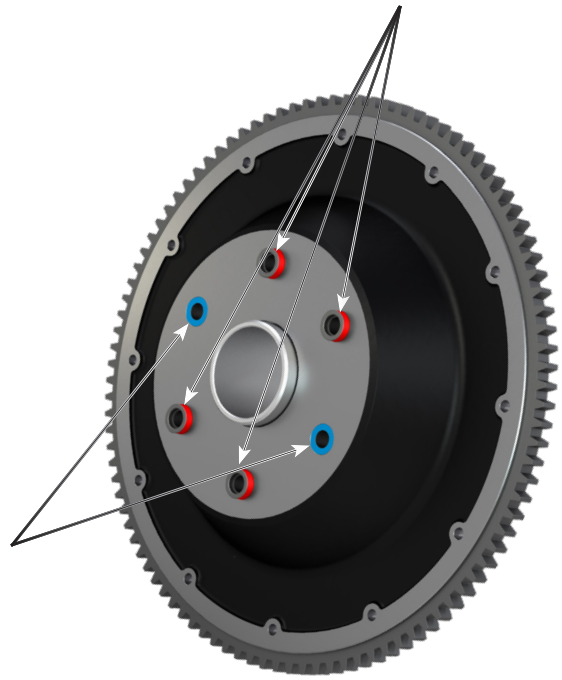

Figure 5- Typical Lycoming Engine Flange

IMPORTANT: MEASURE THE COUNTER-BORE DEPTH OF YOUR HUB. IT SHOULD BE 0.400” DEEP WHERE THE PROTRUDING LUGS WILL NEST. OTHERWISE CONTACT THE MANUFACTURER; YOU MAY HAVE AN OLDER VERSION OF THE HUB WITH DIFFERENT LUG REQUIREMENTS.

NOTE: If using a Whirl Wind Spacer, all 6 drive lugs may be protruding up to 0.65” from your engine flange.

NOTE: If using any other prop extension verify drive lug dimensions.

Overview & Installation Guidelines

Overview

The GA200L propeller by Whirl Wind Propellers Corp is a composite ground-adjustable propeller system. Each GA200L propeller is manufactured to meet or exceed ASTM quality standards and is proudly made in USA.

Composite Blades

The composite blades of the GA200L are manufactured from advanced proprietary thermoset epoxy/graphite composite matrix. This advanced composite structure ensures high-strength and blade accuracy in all flight environments. The blades are finished with a high quality gloss finish and are equipped with an electroformed Nickel leading-edge shield.

Electro-formed Nickel Leading Edge Shield

Each GA200L blade is equipped with a superior electro-formed Nickel leading edge shield for abrasion and wear protection. The electro-formed Nickel leading edge shield is superior to any other material available for blade edge protection. The shield is made to the exact shape of the blade and offers unsurpassed durability.

Aluminum Hub

The GA200L hub is CNC machined from Aerospace Aluminum to exacting tolerances, dimensionally certified and anodized.

WARNING!: Exceeding the noted RPM limitation for an extended period of time may lead to **CATASTROPHIC FAILURE**.

WARNING!: Never Paint the Spinner Back-Plate!

Applicable Engines

Propeller	GA-200L
Lycoming Engines [Max Compression]	(I)O-320 [9.6:1] (I)O-340 [9.6:1] (I)O-360 Parallel Valve [8.5:1]
Propeller Weight:	~18 lbs
Spinner Weight:	~1 lbs
2.25" Spacer Weight:	~4 lbs

Guidelines

Read and follow these guidelines to ensure a safe, successful propeller installation.

CAUTION: Failure to follow these instructions will void all warranties, expressed or implied and may cause mounting difficulties. Improper assembly of the propeller blades and hub parts will lead to vibration issues and bodily injury or death.

1. Verify the magneto (ignition) switch is "OFF" and that both magnetos are grounded.
2. Chock the aircraft wheels to prevent movement.
3. Clean all dirt and oil residue from the engine flange.

   NOTE: WD-40 (or equivalent) is recommended to clean the prop flange before installation.
4. Always use a calibrated torque wrench when tightening mounting or clamping bolts, and torque to the listed value for your propeller.
5. Take inventory of hardware and tools. Ensure that you have the correct number of pieces with the appropriate sizes and lengths.
6. Slide washers onto their corresponding bolts so they are ready for installation.
7. Never modify the propeller hub.
8. Always spin propeller in the opposite direction that the engine spins it.

Required Tools

You will need the following tools to assemble your propeller:

- **a.** Sockets and Ratchet (see Table 4)
- **b.** Calibrated Torque Wrench
- **c.** Digital Protractor
- **d.** Loctite 242 or 262
- **e.** WD-40
- **f.** Sand Paper
- **g.** Mallet
- **h.** Broomstick or Piece of Wood

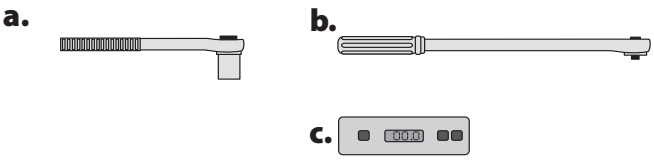

Figure 6- GA200L Required Tools

Hub	Bolt Type	Size	Socket
616	Clamping	**3/8"**	**9/16"-6pt**
	Mounting	**3/8"**	**9/16"-6pt**
716	Clamping	**3/8"**	**9/16"-6pt**
	Mounting	**7/16"**	**5/8"-6pt**
816	Clamping	**3/8"**	**9/16"-12pt**
	Mounting	**1/2"**	**3/4"-12pt**
Spacer	Mounting	**3/8"**	**9/16"-6pt**
		7/16"	**5/8"-6pt**
		1/2"	**3/4"-12pt**

Table 4

Torque Instructions and Broom Trick

Torque Values	
3/8" Bolts	**30 ft-lbs (360 in-lbs)**
7/16" Bolts	**40 ft-lbs (480 in-lbs)**
1/2" Bolts	**50 ft-lbs (600 in-lbs)**

Table 5

To torque bolts, tighten in the following increments using the tightening pattern in Figure 7: 50%, 75%, then Full Torque.

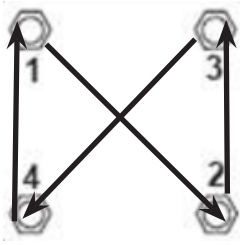

Figure 7- 4-Bolt Tightening Pattern

Broom Trick: Temporarily install forward hub's mounting bolts and place a broom stick between them (Figure 8) while you torque desired mounting bolts per Table 5.

Figure 8- Counter Torque Diagram

Propeller Installation

1. Spacer (if applicable): Match up engine Drive Lugs with counter-bores on spacer. Spacer can be indexed so the flush drive lugs line up the blades for hand-propping. Slide spacer on to engine Drive Lugs and tap with a mallet until flush. Install spacer mounting bolts with Loctite 242 or 262 and flat washers. Torque spacer mounting bolts using the Broom Trick (helps to use all 4 bolts in the protruding drive lugs).

2. Spinner Back-Plate: Make sure to line up the spinner's blade cut outs with the flush drive lugs (may help to install the spinner fairings). Use sandpaper to bore the holes wider if needed to fit over protruding drive lugs. Ensure the protruding drive lugs stand out at least 0.275" beyond the spinner back-plate.

3. Aft Hub: Place the GA200L aft hub-half on the engine flange or spacer (if installed). Make sure the GA200L hub's counter bores sit over the protruding drive-lugs, and that the hub is flush with the engine flange or spinner back-plate

Note: Never Paint the Spinner Back-Plate!

Note: Bolt breakage **WILL** occur if there is a gap between the propeller hub, and the engine flange (or spacer).

4. Install the two short mounting bolts with wedge-lock washers and torque using the Broom Trick. Loctite will not be needed wherever you use lock washers. The 816 Hub uses flat washers here, so Loctite is required!

5. Forward Hub Half and Blades:

   Tip: This is easier with two people however you can install the propeller by yourself;

   1. Place the blades, hub hardware and tools within arm's reach of the mounted aft hub.
   2. Turn the aft hub until the blade sockets are aligned vertically.
   3. Place the top blade in first (with one hand) and hold it in place using the forward hub half (with the other hand).
   4. Tip: Each blade airfoil has a round side and a flat side. Insert the blades into the hub mount half with the round side facing away from the aircraft.
   5. Now angle the forward hub-half so that it holds the top blade but provides a large enough gap to insert the bottom blade and forward hub-half.
   6. Once both blades are in the hub, lightly secure the propeller assembly with the mounting and clamping bolts.

CAUTION: Make sure there is an even gap between the two hub halves. The blades should be secure but easily rotated.

6. **Setting Blade Pitch Angle**

NOTE: If the Clamping Bolts have already been torqued, loosen the bolts so the blades can rotate smoothly in the hub. The wedge-lock washers will click loudly when loosened.

1. Rotate the propeller so that the blades are parallel with the ground and as close to level as possible.

2. Zero your digital protractor on an exposed flat portion of the forward hub-half (or spinner back plate).

3. Slide the pitch paddle and protractor on the left blade as shown in Figure 8. Make sure the pitch paddle is parallel with the blade's cord-line and rotate the blade to the suggest starting pitch angle in Table 6 and snug clamping bolts.

NOTE: The pitch paddle is not meant to be perfectly accurate; it is meant to be precise. The important thing is that you can get the same repeated angle measurement even though if you wanted to, you could hold it slightly different to change it half a degree.

NOTE: Blade pitch angles will typically need to be adjusted until the target static RPM is achieved. **See Pitch and Propeller Performance** on page 17 for more info on selecting pitch.

NOTE: Certain aircraft manufacturers limit the total pitch range.

4. Rotate the GA200L propeller 180° and repeat Steps 1-4 for the other blade.

5. After the blade pitch angles have been set on both blades within 0.3° of each other, torque mounting bolts following the pattern in Figure 7 and tighten each bolt 1/8 to 1/4 turn at a time. Check blade pitch at each torque interval. Then finish torquing clamping bolts.

NOTE: It is important to maintain an even gap between the hub-half to prevent a change in pitch angle.

NOTE: After all mounting and clamping bolts have been properly tightened, check the blade angles again to make sure they have not changed.

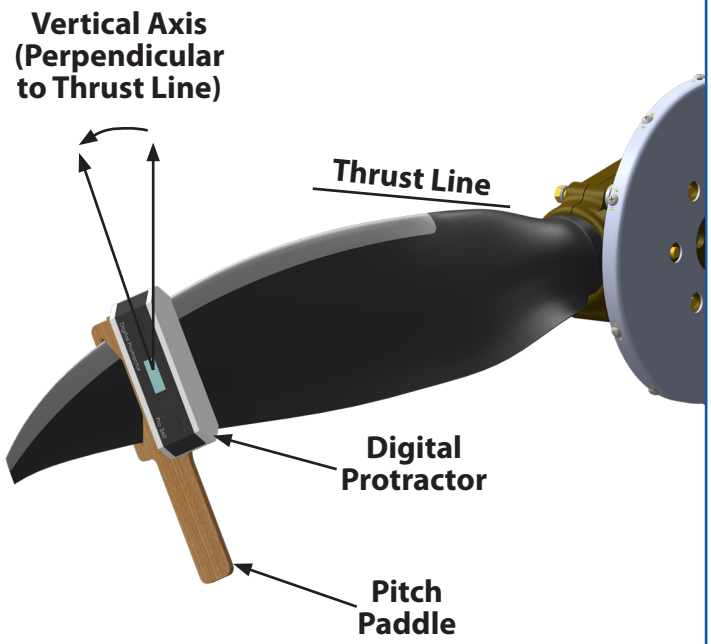

Figure 9- GA200L Pitch Paddle Diagram

Propeller	Example Aircraft	Engine	Blade Pitch	Static RPM
High Speed	RV-9	150HP	20°	2200 to 2350
High Speed	RV-6A	160HP	21.5°	
High Speed	RV-4	180HP	23°	
STOL 78"	CUB	150HP	15°	2300 to 2450
STOL 82"	CUB	180HP	16°	

Table 6

IMPORTANT: After first installation run the propeller for 5 min at 50% RPM. Then check all mounting and clamping bolt torque values with Table 5.

IMPORTANT: After the first 5 hours of operation, or any blade angle (pitch) change, re-check all hub mounting bolt and blade clamping bolt torque values from Table 5.

7 Recommended you skip to Verify Static RPM step before installing spinner.

1. If installing a spinner with fwd bulkhead, place the forward bulkhead on the forward hub-half and line up the bolt holes (not a square pattern). Keeping track of the orientation, place all 4 bolts (AN3H3A) in bulkhead with washers sandwiching the bulkhead (will be dangling precariously).

2. Carefully screw in the bolts keeping a gap between the bulkhead and the hub so as not to knock the bolts or washers out.

3. Tighten and safety-wire the bolts (AN3H3A) being sure not to exceed 2 ft-lbs (24 in-lbs) of torque.

4. Install the Spinner Dome and fairings over the back plate using #8 screws .

Verifying Static RPM

Before operation, **Verify Static RPM**

WARNING: Exceeding a Limitation for an extended period of time may lead to a **CATASTROPHIC FAILURE, BODILY INJURY OR DEATH**.

Inspection Intervals	Inspection Type
Any Pitch Change	Check Bolt Torque (Mounting bolts may be different than clamping bolts)
First 5 Hours	
Every 25 Hours	
Every 50 Hours	50 Hr Per Page 12
Repeat intervals every 25 and 50 Hr until 2000 hours is reached and a major periodic inspection is necessary	

Table 7

Torque Values	
3/8" Bolts	**30 ft-lbs (360 in-lbs)**
7/16" Bolts	**40 ft-lbs (480 in-lbs)**
1/2" Bolts	**50 ft-lbs (600 in-lbs)**

Table 8

NOTE: Have your tachometer calibrated by a professional before performing this next operation.

1. With the brakes on, run the engine at full throttle and note the static RPM on the tachometer.

   The static RPM for a High Speed propeller should be between 2200 to 2350 RPM.

   The Static RPM for a STOL propeller should be between 2300-2450 RPM.

   If your measured RPM does not fall within the appropriate range, use the following guide lines to repitch the blades.

   - Typically 1 degree of pitch changes the static engine RPM by about 100 RPM
   - If the static RPM is too low, decrease the blade pitch angle to increase RPM.
   - If the static RPM is too high, increase the blade pitch angle to reduce RPM.

   WARNING: NEVER EXCEED THE MAXIMUM RPM RATING FOR YOUR ENGINE. If you are not seeing your correct static RPM, be certain the tachometer was properly calibrated and verify blade pitch angles.

2. After the desired static RPM is achieved, re-check all bolt torque values. The ideal pitch setting will allow the propeller to reach (with out exceeding) maximum RPM at full throttle in level flight.

WARNING: Do not operate your propeller above the recommended propeller RPM. If your propeller has been subjected to an over speed condition of 10% over the maximum propeller RPM (example 2700 X 1.1 = 2970) for more than 2 minutes, you must land and perform a 100 hour inspection. **After a Suspected impact or an overspeed condition of *20% or higher, the propeller must be removed from service and returned to the manufacturer for inspection***.

IMPORTANT: After first installation run the propeller for 5 min at 50% RPM. Then check all mounting and clamping bolt torque values with Table 8.

Dynamic Balance Inspection

Any time an engine is paired with a different propeller or different propeller orientation relative to the flywheel (such as rotating a spacer for hand-proping) it should be dynamically balanced. It is not necessary to balance the propeller after re-pitching as long as blade angles are within 0.5° of each other. Dynamic balancing is not always necessary, but is always recommended.

Tachometer Inspection

An improperly operating tachometer can lead to propeller failure, excessive vibration or cause an engine to exceed maximum RPM limits established by manufacturers.

Proper tachometer operation and accuracy should always be checked (using the manufacturer's procedure, if available) during normal maintenance intervals.

Inspection Intervals	Inspection Type
Any Pitch Change	Check Bolt Torque (Mounting bolts may be different than clamping bolts)
First 5 Hours	
Every 25 Hours	
Every 50 Hours	50 Hr Per Page 12
Repeat intervals every 25 and 50 Hr until 2000 hours is reached and a major periodic inspection is necessary	

Table 9

Torque Values	
3/8" Bolts	**30 ft-lbs (360 in-lbs)**
7/16" Bolts	**40 ft-lbs (480 in-lbs)**
1/2" Bolts	**50 ft-lbs (600 in-lbs)**

Table 10

Pre-Flight Inspection

Perform this inspection before every flight.

IMPORTANT: After first installation run the propeller for 5 min at 50% RPM. Then check all mounting and clamping bolt torque values with Table 10.

IMPORTANT: After the first 5 hours of operation, or any blade angle (pitch) change, re-check all hub mounting bolts and blade clamping bolts torque values from Table 10.

Before each flight, carefully examine the propeller blades and hub for looseness, any signs of damage, excessive wear or any other condition that would make the propeller unsafe to operate.

The pre-flight walk-around is an important element of the process of airworthiness maintenance. It should not be merely a superficial look, but a studied review of the condition of everything that might give trouble during the forthcoming flight.

1. Carefully examine the propeller assembly for looseness, any signs of damage, excessive wear or any other condition that would make the propeller unsafe to operate.
2. Check the leading edge of blades for cracks and debonding.
3. Check the spinner and bulkhead for security, missing screws, damage and cracks. Cracks typically originate from the attachment screws.
4. Check for looseness of the bulkhead. This could be an indication that the mounting bolts are loose and need to be retightened. **after every 25 hours of operation all bolt torques must be checked.**
5. Note any indications in the logbook for future reference to determine whether an acceptable condition is getting worse.

First Flight

1. Installation and Preflight procedures should be reviewed for missed/improper steps (verify all torque specs, Loctite, and safety wire are utilized where applicable on propeller and spinner)

2. Plan to remain above the airport for your first flight.

3. Be careful not to exceed 2700 RPM, especially if static RPM is above 2400 RPM!

4. Slowly increase operation envelope: in level flight and low cruise power setting , slowly run RPM up to 2700 (or max achievable) RPM. Take note of any vibrations or other noteworthy observations.

5. Note max RPM in level flight. Pitch may need to be increased or decreased for your preference.

6. After first 5 hours of flight, and every 25 hours subsequently, check all bolt torques and blade angle split.

50-Hour Inspection, 12 Calender Months Inspections

In addition to the recommendations for the Pre-Flight Inspection, the propeller and spinner should be visually examined in detail after every 50 hours or 12 calender months. This will require the removal of the spinner for a detailed examination.

50-Hour or 12 calendar months inspection:

1. Remove Spinner Dome and examine it for damage, and cracks. If necessary, replace the Spinner Dome.

2. Remove Clamping Bolts and dimensionally check against one another. Any bolts that exhibit stretching, corrosion or damage are to be replaced.

3. Remove the Forward Hub-Half and set aside.

4. Write down blade angle and mark each blade with its respective orientation to the hub/engine to maintain dynamic balance when re-assembling

5. Remove each blade and inspect blade shanks for any wear. A thorough visual inspection is recommended together with a coin tap inspection of each composite blade, including the nickel erosion shield on the leading edge (see AC 43-5).
   - No dents in the metal erosion shield should be deeper than 1/8".
   - No dents should puncture the metal erosion shield.
   - No excessive wear on the leading edge.

   (If further inspection is required, return the blades to the factory or an approved propeller shop for further examination.)

6. Conditions requiring blade replacement:
   - Any hole in hollow blade shell (doesn't apply if a replacement metal erosion shield will cover hole).
   - Any crack deeper than .025".
   - Any solid tip damage that can't be trimmed off completely

7. Remove Mounting Bolts and dimensionally check against one another. Any bolts that exhibit stretching, corrosion or damage such as cracks or nicks are to be replaced.

8. Remove the Hub Mount Half . Inspect both hub-halves for corrosion.

9. Remove the rear spinner bulkhead and examine for missing fasteners, damage, and cracks. If damaged, replace the spinner bulkhead.

10. Check torque on optional spacer, if you remove the spacer, keep track of orientation so as not to change propeller orientation (affects dynamic balancing).

11. It is recommended to replace the Hub hardware during the 12 month condition inspection. Because the initial installation typically involves re-pitching the propeller several times, it is HIGHLY recommended the special wedge-lock washers be replaced during the 12 month condition inspection.

12. Reinstall the assembly per the above installation instructions.

2000-Hour Major Periodic Inspection

Must be accomplished by an A&P or IA.

1. Remove Spinner Dome and examine it for damage, and cracks. If necessary, replace the Spinner Dome.

2. Remove Clamping Bolts and washers, Retire both sets from service.

3. Remove the Hub Clamp Half and set aside.

4. Remove Mounting Bolts and washers and Retire both sets from service.

5. Remove the Hub Mount Half .

6. Remove the rear spinner bulkhead and examine for missing fasteners, damage, and cracks. If damaged, replace the spinner bulkhead. Check torque on optional spacer.

7. Send both hub halves and both blades to an **Approved Propeller Repair Center** for the remaining 2000 hour inspection.

NOTE: These blades do not have life limitation. There is no specified overhaul time. The propeller parts are removed from service when they can no longer meet the Continued Airworthiness Requirements.

Propeller Removal

1. Before working on the propeller disconnect the battery and make sure the ignition switch is turned off.

2. Perform installation procedure as illustrated on page 2 or 3 (depending on installation) in reverse order of operation.

Suspected Impact

Propellers that have been involved in a known or suspected static or rotating impact with relatively solid objects (e.g., ground, maintenance stands, runway lights, birds, etc.) or relatively yielding objects (e.g., snow banks, puddles of water, heavy accumulation of slush, etc.) should be inspected for damage before further flight.

If the inspection reveals one or more of the following listed indications, the propeller should be removed and sent to Whirl Wind Propellers for evaluation.

- A blade that tracks out of limits or out of edge alignment.
- Loose blades in the hub.
- Any diameter reduction (tip damage).
- Visible major damage to the hub that cannot meet the Minor Hub Repairs criteria.
- Visible major damage to a blade that cannot meet the Minor Blade Repairs criteria.
- Operating changes, such as vibration or abnormal RPM.

IMPORTANT: After any propeller strike the bolts should be replaced.

Lightning Strike

Any Whirl Wind composite blade suspected of lightning strike should be inspected and may require repair or replacement.

Lightning strikes usually enter a composite blade through the metal erosion shield. If a lightning strike is present, a darkened area and possible pitting, usually in the proximity of the tip, will be noticeable.

If a lightning strike is suspected or detected, consider the blade unairworthy. Return the blade to the factory or an approved propeller repair center for further examination.

Normal Wear and Tear

The following picture shows various size paint chips on the aft (high pressure) side of a propeller blade. This is normal wear and tear, no action is needed, and there are no delaminations here. For asthetics you can use primer to fill chips, sand flush with a sanding block, and touch up with paint. Another option is to paint over with a clear coat.

Wear is inevitable on the metal erosion shield. The wear rate depends on several factors, including high operating RPM's in rain or sandy areas, FOD on taxiways and runways, etc.

Continued Airworthiness Requirements

The following recommendations will help you operate your propeller safely, keep it looking good and help it to last.

NOTE: There is no specified overhaul time. The propeller parts are removed from service when they can no longer meet the Continued Airworthiness Requirements.

- Never install a propeller unless it is a model approved for the aircraft/engine. The service history must be properly documented, and the propeller must pass a pre-installation inspection.
- A thorough visual inspection should catch a dangerous flight condition. Use touch and hearing as well as visual clues. Changes in surface roughness, unusual free play, and odd sounds indicate conditions that may affect airworthiness. Feel for roughness and look for texture changes, waviness, and changes in reflection that may signal the removal of protective coatings. Some areas may require the use of a 10x magnifying glass to identify small features or find cracking.
- The pre-flight walk-around is very important, and should be a studied review of any condition that might give trouble during flight. Refer to the **Pre-Flight Inspection** section for details.
- Do not paint over areas of corrosion on hub parts.
- Do not operate any aircraft after a propeller has been subjected to an impact without a thorough inspection. Refer to the **Inspection After Suspected Impact** section for details.
- Do not use the propeller as a tow-bar to move your aircraft.
- Apply a good quality automotive paste wax to the blades at least once a year.
- Avoid running-up in areas containing loose stones, sand, and gravel, to reduce erosion and/or damage to the leading edges and blades.
- Finish loss off the leading edge is a normal wear item and is dependent on the amount of operation in rain and grit.
- Whenever there is evidence of engine roughness, check bolt torque on both the clamping and mounting bolts, and check the propeller blades for track. The blades should track within 1/8" of each other at the tip. Rotating the propeller and reinstalling may help.
- If the bolts are inadvertently over-torqued, they should be replaced immediately.
- If your propeller blade(s) or hub assemblies begin to show any of the following conditions, it must be repaired by an approved propeller shop or retired from service:
  a. Cracks in the metal hub or bolts,
  b. Loose metal leading edge,
  c. Any crack across the blade,
  d. Any crack along the blade length,
  e. Blade impact damage with missing composite material larger than 0.5 square inches and/or deeper than 0.025"
  f. Obvious damage or wear beyond economical repair.

Example Propeller Combinations

Model	Diameter(s)	Weight	Engines	Limits
GA200L-616	68″-72″	18 lbs	Lycoming O-320, O-340, O-360 series engines	2700 RPM MAX (Propeller) 180 HP Max
GA200L-716	68″-72″	18 lbs	Lycoming O-320, O-340, O-360 series engines	2700 RPM MAX (Propeller) 180 HP Max
GA200L-816	68″-72″	18 lbs	Lycoming O-320, O-340, O-360 series engines	2700 RPM MAX (Propeller) 180 HP Max
GA200L-STOL-616	76″- 82″	18 lbs	Lycoming O-320, O-340, O-360 series engines	2700 RPM MAX (Propeller) 180 HP Max
GA200L-STOL-716	76″- 82″	18 lbs	Lycoming O-320, O-340, O-360 series engines	2700 RPM MAX (Propeller) 180 HP Max
GA200L-STOL-816	76″- 82″	18 lbs	Lycoming O-320, O-340, O-360 series engines	2700 RPM MAX (Propeller) 180 HP Max

CAUTION – Experimental Installations Only.

This GA200L propeller is an experimental propeller system. WWPC has designed and engineered this propeller for specific series engines with general known characteristics. However, it is impossible to know and test all possible modifications and combinations of modifications for these type engines in the experimental category. The owner and operator of this propeller acknowledges this nature of the experimental category and understands that experimental engine modifications can severely limit the life and reliability of this propeller. INSTALLATIONS ON MODIFIED ENGINES MAY CREATE AN UNSAFE CONDITION THAT MAY RESULT IN DEATH, SERIOUS BODILY INJURY, AND/OR SUBSTANTIAL PROPERTY DAMAGE.

PROPELLER PERFORMANCE

In selecting a propeller, keep in mind that both aircraft and engines of the same model may vary in performance, and that operators may want different performance characteristics. For instance, one person may require a high climb rate while another seeks maximum cruising efficiency.

STANDARD PITCH / NORMAL FLYING

For normal or cross country flying, a propeller that turns up to maximum continuous engine RPM at full throttle level flight will give best all-around performance. To achieve this configuration, aim for the lowest static rpm within the recommended range.

CRUISE PITCH

A cruise propeller will turn 150 to 250 static RPM less than a standard pitch propeller. While cruise pitches will provide 4-6 mph higher airspeeds at low-altitude cruise power rpm's, maximum level flight speeds are no better than climb or standard pitches, and the take-off and climb performance will noticeably suffer. Additionally, at higher altitude the cruise-power rpm increases to max engine rpm anyway, so the standard pitch configuration then becomes a better cruise pitch configuration for altitudes above about 8,000'.

CLIMB PITCH / HIGH ALTITUDE OPERATION

For improved take-off and climb performance, use a climb pitch that will turn 100 to 200 static rpm more than a standard pitch propeller (Refer to your particular aircraft operating manual for propeller limitations). Climb pitches will typically reduce flight speeds by 4-6 mph at cruise power RPM's. A climb pitch is also recommended for aircraft operating from high density altitude runways. To achieve this configuration, aim for the highest static rpm within the recommended range. Be careful not to exceed max engine rpm when flying a climb pitch configuration.

PITCH NOTES AND LIMITATIONS

The faster the airplane, the higher the pitch setting that will be required to keep the engine from overspeeding at Wide Open Throttle (WOT). While the propeller may be operated at any pitch setting , the WOT straight and level flight, must never exceed 2700 RPM to ensure safe operation.

Limited Warranty

We hope you enjoy your new composite propeller. We have worked hard to ensure that your propeller will meet or exceed your expectations for years to come. We offer a one year limited warranty on any defect in materials and workmanship.

In the event a unit does not conform to this express warranty, Whirl Wind Propellers Corporation will repair or replace the defective material at its place of business in El Cajon, CA, USA. Whirl Wind Propellers Corporation will decide which remedy, repair, or replacement it will provide. Any replacement of a unit or a part of a unit during the warranty period will not extend the warranty beyond the original duration. The remedy of repair or replacement is exclusive and does not include the cost of shipping, removal, or installation, all of which are the customer's responsibility.

Procedure For Obtaining Warranty Service

Units or parts that are defective must be shipped prepaid to Whirl Wind Propellers Corporation at the address listed below:

Whirl Wind Propellers
1800-C Joe Crosson Dr
El Cajon, CA 92020

The unit must be accompanied by a copy of the original (Distributor or Dealer) invoice, a Return Authorization Number (which can be obtained by phoning or emailing wwpc@whirlwindpropellers.com), and a brief description of the defect.

Conditions, Exclusions, and Disclaimers

This limited warranty applies only to units that have been installed, used, and maintained properly in strict accordance with our specifications, instructions, and recommendations. It does not cover units that show abuse, alterations, improper installation, improper maintenance or repair, or improper packaging for shipment; and it does not pertain to damage due to object strike, or excessive blade wear due to operation. Overspeed of any kind or use on or with engines or equipment not approved by Whirl Wind Propellers Corporation automatically voids this warranty. This limited warranty is the only warranty provided with respect to covered units, and THERE ARE NO OTHER WARRANTIES, REPRESENTATIONS, CONDITIONS OR GUARANTEES, EXPRESS OR IMPLIED, WITH RESPECT TO THE COVERED UNITS OR THE MANUFACTURE THEREOF, INCLUDING, WITHOUT LIMITATION, ANY IMPLIED WARRANTIES OF MERCHANTABILITY OR FITNESS FOR A PARTICULAR PURPOSE.

Repair or replacement of a nonconforming unit or part is the exclusive remedy for breach of this limited warranty, and shall constitute fulfillment of all liabilities of Whirl Wind Propellers to a customer or user, whether based on contract, negligence or otherwise. IN NO EVENT SHALL WHIRL WIND PROPELLERS CORPORATION BE LIABLE FOR ANY OTHER EXPENSES, CLAIMS OR DAMAGES OF ANY KIND HOWSOEVER CAUSED, INCLUDING (WITHOUT LIMITATION) ANY OTHER PRODUCT REPLACEMENT OR INSTALLATION COSTS AND/OR ANY DIRECT, INDIRECT, CONSEQUENTIAL, INCIDENTAL OR SPECIAL DAMAGES.

The purchaser of the covered units has read, understood and, by purchasing the units, agrees to be bound by the above terms and conditions. Some states do not allow the exclusion of incidental or consequential damages, so the above limitations may not apply to you. This warranty gives you specific legal rights and you may also have other rights which vary from state to state.

Whirl Wind Propellers Corporation

Whirl Wind Propellers
1800 Joe Crosson Drive, Ste C
El Cajon, CA 92020

(619) 562-3725

www.whirlwindpropellers.com